Advantage® Deluxe Electrol®

Automatic Electric Projection Screen Model

DA-LITE®

SPECIFICATION DATA

SUGGESTED SPECIFICATIONS: _____projection screen(s), _____(H) x _____(W). The Advantage® Deluxe Screen shall have two motors, one to operate door and one to operate screen. Door motor electrically operated 120 volt (60 Hz) not more than 1.2 amp, mounted inside the roller, to be three wire with ground, quick reversal type, oiled for life, with automatic thermal overload cutout, integral gears, capacitor and an electric brake to prevent coasting. To have pre-set but adjustable limit switches to automatically stop fabric door in the "down" position. The door will lift to the closed position where a micro switch shall cut off the electrical current to the door motor. Screen motor is electrically operated 120 volt (60 Hz) not more than 2.4 amp, mounted inside the roller, to be three wire with ground quick reversal type, oiled for life, with automatic thermal overload cutout, integral gears, capacitor and an electric brake to prevent coasting. To have pre-set but adjustable limit switches to automatically stop picture surface in the "up" and "down" positions. The roller to be of rigid metal. Screen fabric to be flame retardant and mildew resistant fiberglass with black masking borders standard. Bottom of fabric shall be formed into a pocket holding a metal rod with plastic caps. Case shall be a white powder coated aluminum extrusion. Bottom of case to be self-trimming with a built-in flange around the bottom of the case. A section of the bottom of the case shall be an aluminum door equipped with concealed hinges so that it opens and closes automatically with the lowering and raising of the picture surface. The balance of the bottom of the case shall be a second hinged aluminum door with manual opening to provide access. Junction box shall be internally integrated into the housing making it possible to install the housing and wire to the building's electrical system during construction. The junction box shall contain a quick connect connector that is mounted in the housing for easy plug-in connection to the motorized fabric and roller assembly. The motorized fabric and roller assembly to be installed in the case at the factory or at a later time at the job site. To be complete with integrated low voltage control unit and three position control switch with cover plate. Suitable for use in environmental air space in accordance with section 300-22 (c) of the National Electric Code, and sections 2-128, 12-010 (3) and 12-100 of the Canadian Electrical Code, part 1, CSA C22.1. Screen to be listed by Underwriters' Laboratories.

HDTV (16:9) Format Dimensions (2" Standard Black Drop at Top)

Viewing Area (H x W)		Nominal Diagonal		Overall Length of Case*		Approx. Ship. Wt.	
In.	Cm	In.	Cm	In.	Cm	Lbs.	Kg
45" x 80"	114 x 203	92"	234	96¼"	244	122	55.3
52" x 92"	132 x 234	106"	269	108¼"	275	137	57.6
54" x 96"	137 x 244	110"	279	112¼"	285	141	64.0
58" x 104"	147 x 264	119"	302	120¼"	305	153	69.4
65" x 116"	165 x 295	133"	338	132¼"	336	165	74.8
78" x 139"	198 x 353	159"	404	156¼"	397	190	86.2
90" x 160"	229 x 406	184"	467	176¼"	448	198	89.8

Wide (16:10) Format Dimensions (2" Standard Black Drop at Top)

Viewing Area (H x W)		Nominal Diagonal		Overall Length of Case*		Approx. Ship. Wt.	
In.	Cm	In.	Cm	In.	Cm	Lbs.	Kg
50" x 80"	127 x 203	94"	239	96¼"	244	120	54.4
57½" x 92"	146 x 234	109"	277	108¼"	275	138	62.6
60" x 96"	152 x 244	113"	287	112¼"	285	141	64.0
65" x 104"	165 x 264	123"	312	120¼"	305	156	70.7
69" x 110"	175 x 279	130"	330	126¼"	321	161	73.0
7²½" x 116"	184 x 295	137"	348	132¼"	336	165	74.8
87" x 139"	221 x 353	164"	417	156¼"	397	190	86.2
100" x 160"	254 x 406	189"	480	176¼"	448	198	89.8

Video (NTSC 4:3) Format Dimensions (2" Standard Black Drop at Top)

Viewing Area (H x W)		Nominal Diagonal		Overall Length of Case*		Approx. Ship. Wt.	
In.	Cm	In.	Cm	In.	Cm	Lbs.	Kg
43" x 57"	109 x 145	72"	183	72¼"	184	83	37.6
50" x 67"	127 x 170	84"	213	82¼"	209	93	42.2
57" x 77"	145 x 196	96"	244	96¼"	244	114	51.7
60" x 80"	152 x 203	100"	254	96¼"	244	118	53.5
69" x 92"	175 x 234	120"	305	108¼"	275	128	58.1
87" x 116"	221 x 295	150"	381	132¼"	336	165	74.8
105" x 140"	267 x 356	180"	457	156¼"	397	190	86.2
120" x 160"	305 x 406	200"	508	176¼"	448	198	89.8

Square Format Dimensions (Screens With ^ Have 2" Standard Black Drop at Top)

Sizes (H x W)		Overall Length of Case*		Approx. Ship. Wt.	
In.	Cm	In.	Cm	Lbs.	Kg
50" x 50"	127 x 127	62¼"	158	71	32.2
60" x 60"	152 x 152	72¼"	184	81	36.7
70" x 70"	178 x 178	82¼"	209	104	47.2
84" x 84"	213 x 213	96¼"	244	115	52.2
6' x 8'^	183 x 244	108¼"	275	128	58.1
8' x 8'	244 x 244	108¼"	275	131	58.4
7' x 9'^	213 x 274	120¼"	305	136	61.7
9' x 9'^	274 x 274	120¼"	305	149	67.6
8' x 10'^	244 x 305	132¼"	336	165	74.8
10' x 10'	305 x 305	132¼"	336	176	79.8
9' x 12'^	274 x 366	156¼"	397	190	86.2
12' x 12'	366 x 366	156¼"	397	200	90.7

*Case length does not include flange

PRODUCT NOTES

- **Matte White:** Horizontal seam required when both dimensions exceed 10'.
- **High Contrast Matte White:** Available in sizes where both dimensions do not exceed 10'.
- **Video Spectra 1.5:** Available in sizes up to 8' in height.
- Overall case length dimensions +/- ¼" (6 mm).
- Detail dimensional drawings, wiring diagrams and installation instructions available upon request.
- Specifications subject to change without notice.
- Custom formats and sizes available upon request.

WHEN ORDERING, MARK APPROPRIATE SELECTIONS

1. Select size from charts on other side.
2. Select viewing surface (All Da-Lite surfaces are GREENGUARD GOLD Certified.):

○ Matte White ○ High Contrast Matte White

○ Video Spectra 1.5

3. Optional accessories:

☐ Extra Drop available to lower picture area more than normal. Specify total drop at top ____ (black or white) or at bottom ____ (black or white) . 13' maximum total surface height including picture area.

☐ No Borders (Black masking borders standard).

☐ Wireless Remote Control for LVC.

- ☐ Radio Frequency Remote.
  - ☐ Radio Frequency Range Extender
- ☐ Infrared Remote.

☐ Key Locking Cover Plate for 120V Switch or LVC.

☐ 220/240 Volt (50 Hz) Motor.

☐ Video Projector Interface Control – built-in

☐ SCB-100 RS-232 Serial Control Board – built-in. **Electrical connections will be on right end of screen case on units with built-in SCB-100.**

- ☐ NET-100 Ethernet-Serial Adapter

☐ SCB-200 RS-232 Serial Control Board – built-in only. **Electrical connections will be on right end of screen case on units with built-in SCB-200.**

- ☐ NET-200 Ethernet-Serial Adapter
- ☐ WC-200 Wall Controller
- ☐ IR-200 Infrared Remote

PRODUCT VIEWS

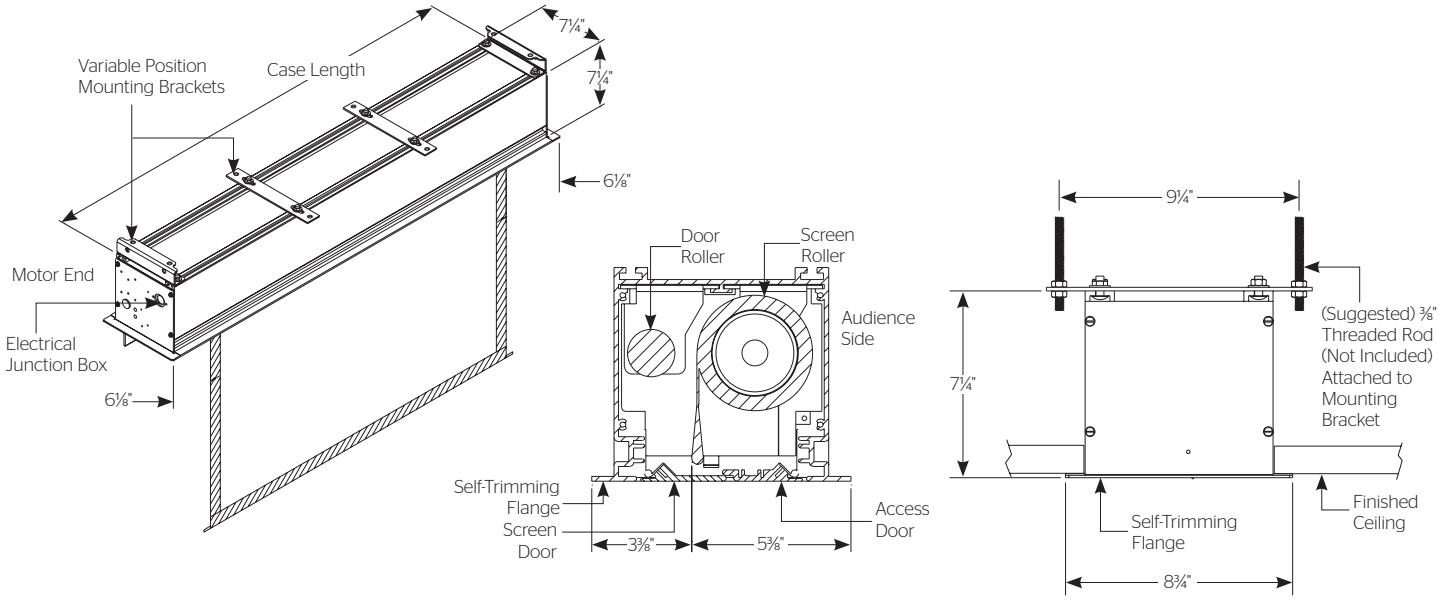

A Milestone AV Technologies Brand

3100 North Detroit Street
Warsaw, Indiana 46582
P: 574.267.8101 or 800.622.3737
F: 574.267.7804 or 877.325.4832
E: info@da-lite.com
www.da-lite.com

DL-0182 (Rev. 2) 11.16

© 2016 Milestone AV Technologies LLC. Printed in U.S.A.

Project Name: _____

Architect: _____ Phone: _____

Contractor: _____ Phone: _____

Supervisor: _____ Phone: _____

Supplier: _____ Date: _____

Revised: _____