Advance Tablet Storage Carts

The Advance CT-TS32 and CT-TS48 Tablet Sync, Charging and Storage Carts are fully equipped to charge and sync tablet computers to a master laptop or desktop computer. The CT-TS32 holds up to 32 tablet computers and the CT-TS48 will hold up to 48 tablets and each will charge and sync via integrated USB charging ports. The sync and charging system automatically switches to the charging mode once synchronization is complete. Vinyl mats cover each shelf to protect the tablets while storing and charging.

The CT-TS32 and CT-TS48 also feature secure access including locking front doors with a multi-point locking system that engages the top and bottom shelves when locked. A back panel with security screws only allows access to the power supplies and wiring. The carts are standard with 4" swivel casters and feature a dove gray powder coated finish.

DA-LITE

CARTS AND STANDS

Advance Tablet Storage Carts

- Fully equipped to charge and sync tablet computers to a master laptop or desktop computer via included 3' USB cable.
- The CT-TS32 holds up to 32 tablet computers with an extra shelf for storage and the CT-TS48 will hold up to 48 tablets and each will charge and sync via integrated USB charging ports.
- The sync and charging system automatically switches to the charging mode once synchronization is complete.
- Vinyl mats cover each shelf to protect the tablets while storing and charging.
- Secure access including locking drawers and locking front doors with a multi-point locking system that engages the top and bottom shelves when locked.
- Standard with cooling fan.
- Standard with 4" swivel casters, and features a dove gray powder coated finish.

USB Charging Ports in Lockable Drawers

Master PC Connection and Outlets

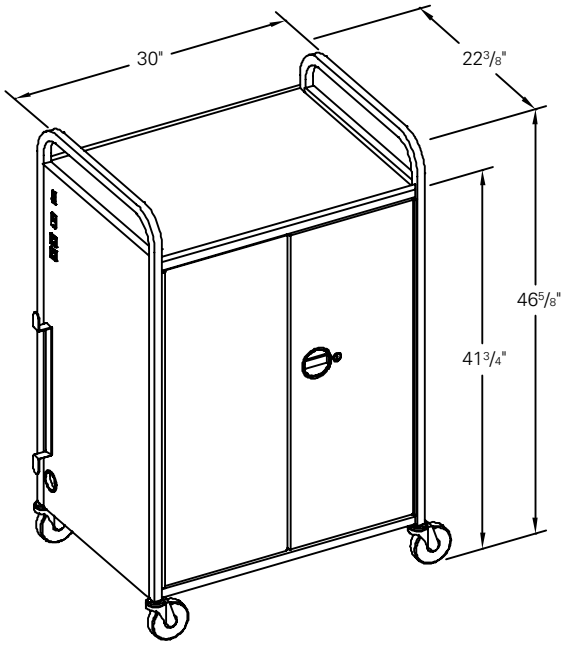

Da-Lite Screen Company LLC
3100 North Detroit Street
P.O. Box 137
Warsaw, IN 46581-0137 U.S.A.
Phone: 574.267.8101
Toll Free: 800.622.3737
Fax: 574.267.7804
Toll Free Fax: 877.325.4832
www.da-lite.com
info@da-lite.com