CARTS AND STANDS

Advance Netbook Storage Cart

The Advance CT-NS42 Netbook Charging and Storage Cart from Da-Lite was designed with educational environments in mind providing a fast and efficient solution for charging and securely storing netbook computers. The cart holds and charges up to 42 netbook computers and includes a Power Management System that charges each netbook in the most energy efficient manner while allowing the fastest number to be charged simultaneously, up to 11 amps at one time. At the same time, battery life is preserved by charging each netbook completely before moving on to the next unit. A Monitoring System is included which allows users to view the charging status for each of the three shelves. The CT-NS42 also features secure access including locking front doors and a back panel with security screws that only allows access to the chargers. The cart comes standard with 5" casters, two swivel and two locking, and features a dove gray powder coated finish.

DA-LITE

CARTS AND STANDS

Advance Netbook Storage Cart

- CT-NS42 Charging and Storage Cart provides a fast and efficient solution for charging and storing netbook computers.
- Holds and charges up to 42 netbook computers and includes a Power Management System that charges each netbook in the most energy efficient manner while allowing the largest number to be charged simultaneously.
- Battery life is preserved by charging each netbook completely before moving on to the next unit.
- A Monitoring System is included which allows users to view the charging status for each of the three shelves.
- Secure access including locking front doors and a back panel with security screws that only allows access to the chargers.
- Standard with 5" casters, two swivel and two locking, and features a dove gray powder coated finish.

CT-NS42 Monitoring System.

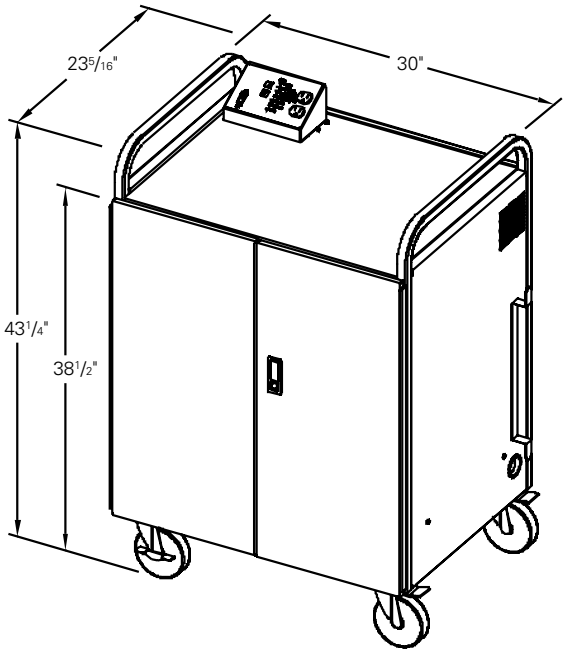

Da-Lite Screen Company LLC
3100 North Detroit Street
P.O. Box 137
Warsaw, IN 46581-0137 U.S.A.
Phone: 574.267.8101
Toll Free: 800.622.3737
Fax: 574.267.7804
Toll Free Fax: 877.325.4832
www.da-lite.com
info@da-lite.com